Molecular Physics, Vol. 104, Nos. 22–24, 20 November–20 December 2006, 3411–3418

Are the energy and virial routes to thermodynamics equivalent for hard spheres?

ANDRÉS SANTOS*

Departamento de Física, Universidad de Extremadura, E-06071 Badajoz, Spain

(*Received 12 July 2006; in final form 19 August 2006*)

The internal energy of hard spheres (HS) is the same as that of an ideal gas, so that the energy route to thermodynamics becomes useless. This problem can be avoided by taking an interaction potential that reduces to that of the HS in certain limits. In this paper, the square-shoulder (SS) potential characterized by hard-core diameter σ', soft-core diameter $\sigma > \sigma'$ and shoulder height ϵ is considered. The SS potential becomes that of the HS if (i) $\epsilon \to 0$, or (ii) $\epsilon \to \infty$, or (iii) $\sigma' \to \sigma$ or (iv) $\sigma' \to 0$ and $\epsilon \to \infty$. The energy-route equation of state for the HS fluid is obtained in terms of the radial distribution function for the SS fluid by taking limits (i) and (ii). This equation of state is shown to exhibit, in general, an artificial dependence on the diameter ratio σ'/σ. If, furthermore, the limit $\sigma'/\sigma \to 1$ is taken, the resulting equation of state for HS coincides with that obtained through the virial route. The necessary and sufficient condition to obtain thermodynamic consistency between both routes for arbitrary σ'/σ is derived.

Keywords: Hard spheres; Thermodynamic consistency; Energy route; Virial route

1. Introduction

As is well known, there are several routes to obtain the thermodynamic quantities of a fluid in equilibrium in terms of the pair interaction potential $\phi(r)$ and the radial distribution function $g(r)$ [1–3]. The most frequently used are the virial route,

$$\frac{\beta p}{\rho} \equiv Z = 1 + \frac{2\pi}{3}\rho \int_0^\infty \mathrm{d}r\, r^3 y(r) \frac{\partial}{\partial r} \mathrm{e}^{-\beta\phi(r)}, \tag{1}$$

the compressibility route,

$$\left(\beta \frac{\partial p}{\partial \rho}\right)^{-1} \equiv \chi = 1 + 4\pi\rho \int_0^\infty \mathrm{d}r\, r^2 [\mathrm{e}^{-\beta\phi(r)} y(r) - 1], \tag{2}$$

and the energy route,

$$u = \frac{3}{2\beta} + 2\pi\rho \int_0^\infty \mathrm{d}r\, r^2 \phi(r) \mathrm{e}^{-\beta\phi(r)} y(r). \tag{3}$$

In equations (1)–(3), p is the pressure, ρ the number density, $\beta \equiv 1/k_\mathrm{B}T$ the inverse temperature, Z the compressibility factor, χ the (dimensionless) isothermal compressibility, u the internal energy per particle and $y(r) \equiv \exp[\beta\phi(r)]g(r)$ is the cavity (or background) function.

The three thermodynamic quantities Z, χ and u are connected by thermodynamic relations, namely

$$\chi^{-1} = \frac{\partial}{\partial \rho}(\rho Z), \tag{4}$$

$$\rho \frac{\partial}{\partial \rho} u = \frac{\partial}{\partial \beta} Z. \tag{5}$$

Thus, the compressibility factor, and hence the equation of state (EoS), can be obtained from $y(r)$ (or, equivalently, $g(r)$) either directly from equation (1), or from equations (2) and (4), or from equations (3) and (5). Given an interaction potential $\phi(r)$, if the *exact* cavity function $y(r)$ is known for any thermodynamic state (ρ, β), the three routes yield, of course, the same EoS. On the other hand, if an *approximate* function $y(r)$ is used, a different result is, in general, obtained from each route, a problem known as the thermodynamic inconsistency of the approximation.

Some liquid state theories contain one or more adjustable state-dependent parameters which are tuned

*Email: andres@unex.es

Molecular Physics
ISSN 0026–8976 print/ISSN 1362–3028 online © 2006 Taylor & Francis
http://www.tandf.co.uk/journals
DOI: 10.1080/00268970600968011

to achieve thermodynamic consistency between several routes, usually the compressibility and the virial routes. Examples include, among other approaches, the modified hypernetted-chain closure [4], the Rogers–Young closure [5], the Zerah–Hansen closure [6], the self-consistent Ornstein–Zernike approximation [7], the hierarchical reference theory [8], Lee's theory based on the zero-separation theorems [9], the generalized mean spherical approximation [10] and the rational-function approximation [11].

On the other hand, standard theories do not have fitting parameters and are thus, in general, thermodynamically inconsistent. An interesting result, however, is that the hypernetted-chain (HNC) integral equation provides thermodynamically consistent results through the virial and energy routes, regardless of the potential $\phi(r)$ [12]. A similar result has recently been reported [13] in the case of the mean spherical approximation (MSA) applied to soft potentials, such as the Gaussian core model $\phi(r) = \epsilon \exp[-(r/\sigma)^2]$. Therefore, a certain close relationship between the energy and virial routes seems to exist, at least for some approximate theories and/or some interaction models. This is further supported by a recent proof of the equivalence of both routes when taking a hard-sphere (HS) limit from the square-shoulder (SS) model, regardless of the approximate theory used to describe the structural properties of the fluid [14].

For a HS liquid, the second term on the right-hand side of equation (3) vanishes, so that the internal energy per particle is the same as that of an ideal gas, i.e. it reduces to the kinetic contribution $3/2\beta$ and is independent of density. Moreover, the compressibility factor Z of a HS liquid is independent of temperature. As a consequence, thermodynamic relation (5) is trivially satisfied as $0 = 0$ and it is, in principle, impossible to obtain the EoS of the HS fluid through the energy route. This lack of definition of the energy route of a HS fluid can be avoided by considering a suitable interaction potential that reduces to that of the HS in certain limits. The simplest choice for such a potential is perhaps the SS function

$$\phi_{\mathrm{SS}}(r) = \begin{cases} \infty, & r < \sigma', \\ \epsilon, & \sigma' < r < \sigma, \\ 0, & r > \sigma, \end{cases} \tag{6}$$

where ϵ is a positive constant that measures the height of the square shoulder, while the width is given by the difference $\sigma - \sigma'$. The potential (6) has been studied by several authors in different contexts [15]. For the purpose of this paper, it is chosen here because it reduces to the HS interaction potential in several special cases. First, in the limit of zero shoulder height, $\epsilon \to 0$ (or, equivalently, in the limit of infinite temperature), the potential (6) becomes that of a HS of diameter σ'. In the opposite limit of infinite shoulder height, $\epsilon \to \infty$ (or, equivalently, in the limit of zero temperature), one also obtains the HS interaction, but this time that corresponding to diameter σ. These two limits are important because one of them is needed as a boundary condition when integrating the internal energy over temperature to obtain Z from equation (5). Interestingly, the HS potential of diameter σ is also recovered in the limit of zero shoulder width, $\sigma' \to \sigma$, at finite ϵ (finite temperature). In the opposite limit $\sigma' \to 0$, the hard-core part of the interaction has a vanishing influence and the SS potential becomes that of so-called penetrable spheres (PS). The PS fluid has been studied extensively [16] as an example of bounded potentials describing the effective two-body interaction in some colloidal systems [17]. These special limits of the SS potential are shown in figure 1. It is worth recalling that the square-well (SW) potential is described by equation (6), except that ϵ is negative in that case. From the SW potential, one can still obtain the HS potential of diameter σ' in the limit $|\epsilon| \to 0$ (or, equivalently, in the limit $T \to \infty$, which then provides the boundary condition for the energy route to the EoS) and the HS potential of diameter σ in the limit $\sigma' \to \sigma$, but neither of the other two cases ($\sigma' \to 0$ and $|\epsilon| \to \infty$) depicted in figure 1.

As stated above, starting from the EoS for SS particles obtained via the energy route, it can be

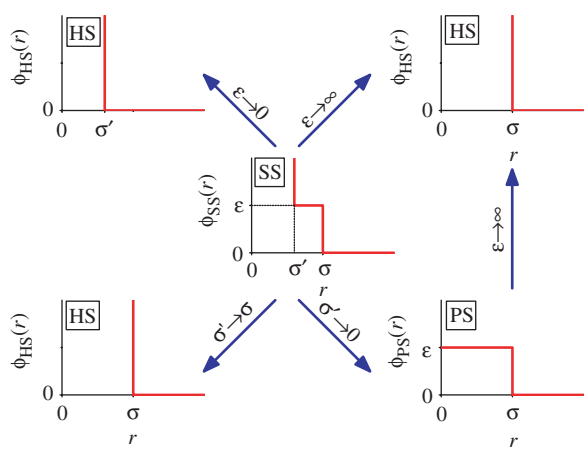

Figure 1. The graph in the center represents the square-shoulder (SS) interaction potential. It reduces to the hard-sphere (HS) potential of hard-core diameter σ' in the limit $\epsilon \to 0$ and to the HS potential of diameter σ in the limit $\epsilon \to \infty$ as well as in the limit $\sigma' \to \sigma$. The penetrable-sphere (PS) interaction model is obtained in the limit $\sigma' \to 0$. The limit $\epsilon \to \infty$ taken in the PS potential again leads to the HS model.

proven [14] that when one *first* takes the limit $\epsilon \to \infty$ and *then* the limit $\sigma' \to \sigma$, the resulting EoS for HS always coincides with that obtained via the virial route. However, there is no *a priori* reason to expect that this equivalence still holds when the HS limit is taken following a different path. The aim of this paper is to clarify this issue and show, by taking a couple of alternative paths, that the energy-route EoS indeed depends on the path followed from SS to HS.

The paper is organized as follows. The virial and energy routes to the thermodynamic properties of SS fluids are presented in section 2. The HS limits along different paths are worked out in section 3. The results are summarized and discussed in section 4. Finally, the paper closes with the conclusions.

2. Virial and energy routes to the equation of state of square-shoulder fluids

Let us consider a fluid of particles interacting via the pairwise SS potential given by equation (6). Therefore,

$$\mathrm{e}^{-\beta\phi_{\mathrm{SS}}(r)} = \begin{cases} 0, & r < \sigma', \\ \mathrm{e}^{-\beta\epsilon}, & \sigma' < r < \sigma, \\ 1, & r > \sigma. \end{cases} \tag{7}$$

We take the 'outer' diameter σ as fixed and define the relative value $\lambda \equiv \sigma'/\sigma$ of the 'inner' diameter σ'. This quantity $0 \le \lambda \le 1$ parameterizes a family of independent SS potentials. Given a value of λ, the thermodynamic state is determined by the density and the temperature. In dimensionless units, we can measure the density by the parameter $\eta \equiv (\pi/6)\rho\sigma^3$ [18] and the temperature using $\beta^* \equiv \beta\epsilon = \epsilon/k_{\mathrm{B}}T = 1/T^*$. Moreover, without loss of generality, henceforth the distances will be understood to be measured in units of σ. For the SS interaction (6), the virial and energy equations, equations (1) and (3), become

$$Z^{\mathrm{v}}_{\mathrm{SS}}(\eta,\beta^*;\lambda) = 1 + 4\eta[\lambda^3\mathrm{e}^{-\beta^*} y_{\mathrm{SS}}(r=\lambda|\eta,\beta^*;\lambda) + (1-\mathrm{e}^{-\beta^*}) y_{\mathrm{SS}}(r=1|\eta,\beta^*;\lambda)], \tag{8}$$

$$u_{\mathrm{SS}}(\eta,\beta^*;\lambda) = \epsilon\left[\frac{3}{2\beta^*} + 12\eta\mathrm{e}^{-\beta^*}\int_\lambda^1 \mathrm{d}r\, r^2 y_{\mathrm{SS}}(r|\eta,\beta^*;\lambda)\right], \tag{9}$$

respectively. The notation in equations (8) and (9) makes explicit the dependence of the SS quantities on η, β^* and λ. In addition, the superscript 'v' in equation (8) is introduced to emphasize that it corresponds to the virial route. Making use of equation (5), the energy equation (9) yields the following expression for the compressibility factor:

$$Z^{\mathrm{e}}_{\mathrm{SS}}(\eta,\beta^*;\lambda) = Z^{\mathrm{e}}_{\mathrm{HS}}(\eta\lambda^3) + 12\eta\frac{\partial}{\partial\eta}\eta\int_0^{\beta^*}\beta_1^*\mathrm{e}^{-\beta_1^*}\int_\lambda^1 \mathrm{d}r\, r^2 y_{\mathrm{SS}}(r|\eta,\beta_1^*;\lambda), \tag{10}$$

where use has already been made of the mapping $\mathrm{SS} \to \mathrm{HS}$ in the infinite-temperature limit $\beta^* \to 0$. The superscript 'e' refers to Z_{SS} as well as to Z_{HS}, since both sides of equation (10) must agree in the limit $\beta^* \to 0$.

The virial series expansions for the cavity function and the compressibility factor of the SS fluid are defined as

$$y_{\mathrm{SS}}(r|\eta,\beta^*;\lambda) = 1 + \sum_{n=1}^{\infty} y_n^{\mathrm{SS}}(r|\beta;\lambda)\eta^n, \tag{11}$$

$$Z_{\mathrm{SS}}(\eta,\beta^*;\lambda) = 1 + \sum_{n=1}^{\infty} b_{n+1}^{\mathrm{SS}}(\beta;\lambda)\eta^n. \tag{12}$$

Inserting expansion (12) into equations (8) and (10), one obtains the following expressions for the virial-route and energy-route virial coefficients in the SS model:

$$b_n^{\mathrm{SS,v}}(\beta^*;\lambda) = 4\left[\lambda^3\mathrm{e}^{-\beta^*} y_{n-2}^{\mathrm{SS}}(\lambda|\beta^*;\lambda) + (1-\mathrm{e}^{-\beta^*}) y_{n-2}^{\mathrm{SS}}(1|\beta^*;\lambda)\right], \quad n \ge 2, \tag{13}$$

$$b_n^{\mathrm{SS,e}}(\beta^*;\lambda) = b_n^{\mathrm{HS,e}}\lambda^{3(n-1)} + 12(n-1)\int_0^{\beta^*}\mathrm{d}\beta_1^*\mathrm{e}^{-\beta_1^*}\int_\lambda^1 \mathrm{d}r\, r^2 y_{n-2}^{\mathrm{SS}}(r|\beta_1^*;\lambda), \quad n \ge 2. \tag{14}$$

3. Hard-sphere limits

Given an (approximate) cavity function $y_{\mathrm{SS}}(r|\eta,\beta_1^*;\lambda)$, the compressibility factor obtained from equation (10) differs in general from that given by equation (8). The question is, does that difference persist in the HS limit? To address this point, we need to specify the path followed to obtain the HS limit.

Figure 2 presents the relevant three-dimensional parameter space for SS fluids. The plane $\sigma'/\sigma = \lambda = 0$ represents the PS two-dimensional parameter space. Planes $k_{\mathrm{B}}T/\epsilon = 1/\beta^* = 0$ and $\sigma'/\sigma = \lambda = 1$ correspond to a HS of diameter σ, the dimensionless properties of which depend only on the reduced density $\eta = (\pi/6)\rho\sigma^3$ and should be independent of λ (on the plane $k_{\mathrm{B}}T/\epsilon = 0$) and of temperature (on the plane

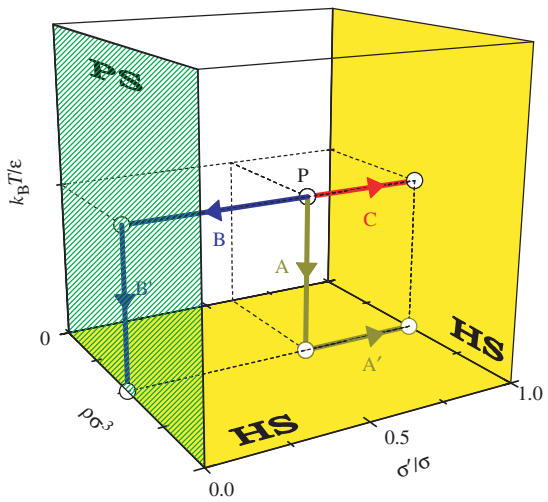

Figure 2. Parameter space for SS fluids. The plane $\sigma'/\sigma = 0$ represents the PS fluids, while planes $k_BT/\epsilon = 0$ and $\sigma'/\sigma = 1$ correspond to HS fluids. Starting from a given SS fluid (represented by point P), it is possible to go to the HS fluid at the same density by following different paths. In particular, paths A, A + A′, B + B′ and C are considered in the text.

$\sigma'/\sigma = 1$). Point P represents a SS liquid with a given value of λ and at a given thermodynamic state (η, β^*). From this, one can follow several paths by changing λ and/or β^* to reach a HS liquid at the same density η. Here we are concerned with paths A (i.e. $\beta^* \to \infty$), A + A′ ($\beta^* \to \infty$ followed by $\lambda \to 1$), B + B′ ($\lambda \to 0$ followed by $\beta^* \to \infty$) and C ($\lambda \to 1$).

3.1. *Path* A + A′

Let us take the zero temperature limit, $\beta^* \to \infty$, on both sides of equation (10). The result is

$$Z^{\mathrm{e}}_{\mathrm{HS}}(\eta) - Z^{\mathrm{e}}_{\mathrm{HS}}(\eta\lambda^3) = 12\eta\frac{\partial}{\partial\eta}\eta\int_0^\infty \mathrm{d}\beta^*\mathrm{e}^{-\beta^*}\int_\lambda^1 \mathrm{d}r\, r^2 y_{\mathrm{SS}}(r|\eta,\beta^*;\lambda). \tag{15}$$

This is actually the result obtained through path A, which will be analysed below. Before proceeding with the subsequent step A′, let us rewrite equation (15) in an equivalent form. First, note that $Z^{\mathrm{e}}_{\mathrm{HS}}(\eta\lambda^3)$ can be expanded around η:

$$Z^{\mathrm{e}}_{\mathrm{HS}}(\eta\lambda^3) = Z^{\mathrm{e}}_{\mathrm{HS}}(\eta) + \sum_{n=1}^{\infty}\frac{(-\eta)^n(1-\lambda^3)^n}{n!}\frac{\partial^n}{\partial\eta^n}Z^{\mathrm{e}}_{\mathrm{HS}}(\eta). \tag{16}$$

As a consequence, equation (15) yields

$$Z^{\mathrm{e}}_{\mathrm{HS}}(\eta) + \sum_{n=1}^{\infty}\frac{(-\eta)^n(1-\lambda^3)^n}{(n+1)!}\frac{\partial^n}{\partial\eta^n}Z^{\mathrm{e}}_{\mathrm{HS}}(\eta) = 1 + \frac{12\eta}{1-\lambda^3}\int_0^\infty \mathrm{d}\beta^*\mathrm{e}^{-\beta^*}\int_\lambda^1 \mathrm{d}r\, r^2 y_{\mathrm{SS}}(r|\eta,\beta^*;\lambda), \tag{17}$$

where use has been made of the consistency condition $Z_{\mathrm{HS}}(0) = 1$. Now taking the limit $\lambda \to 1$ (path A′) on both sides of equation (17), and using the physical condition

$$\lim_{\lambda\to 1} y_{\mathrm{SS}}(r|\eta,\beta^*;\lambda) = y_{\mathrm{HS}}(r|\eta), \tag{18}$$

we finally obtain

$$Z^{\mathrm{e}}_{\mathrm{HS}}(\eta) = 1 + 4\eta y_{\mathrm{HS}}(1|\eta). \tag{19}$$

This is nothing but the virial EoS, equation (8), particularized to HS. This proves that no matter what approximation is used to obtain $y_{\mathrm{SS}}(r|\eta,\beta^*;\lambda)$, the energy EoS coincides with the virial one when the HS limit is reached from the SS fluid following the double path A + A′. The proof presented in [14] is slightly more general since it applies to mixtures and to any dimensionality.

The equivalence between the energy and virial routes when the path A + A′ is followed can also be proven at the level of the virial coefficients. We first take the limit $\beta^* \to \infty$ on both sides of equation (14) (path A) with the result

$$b_n^{\mathrm{HS,e}} = \frac{12(n-1)}{1-\lambda^{3(n-1)}}\int_0^\infty \mathrm{d}\beta^*\mathrm{e}^{-\beta^*}\int_\lambda^1 \mathrm{d}r\, r^2 y^{\mathrm{SS}}_{n-2}(r|\beta^*;\lambda), \quad n \geq 2. \tag{20}$$

Next, the limit $\lambda \to 1$ (path A′) yields

$$b_n^{\mathrm{HS,e}} = b_n^{\mathrm{HS,v}} = 4y^{\mathrm{HS}}_{n-2}(1), \quad n \geq 2. \tag{21}$$

3.2. *Path* B + B′

Let us now consider the path B + B′ in figure 2, which is very different from path A + A′ considered above. We will restrict ourselves to the fourth virial coefficient since this is enough to check that the virial and energy routes do not now coincide in the HS limit. We start by taking the PS limit $\lambda \to 0$ (path B) on both sides of equations (13) and (14),

$$b_n^{\mathrm{PS,v}}(\beta^*) = 4(1-\mathrm{e}^{-\beta^*})y^{\mathrm{PS}}_{n-2}(1|\beta^*), \; n \geq 2, \tag{22}$$

$$b_n^{\mathrm{PS,e}}(\beta^*) = 12(n-1)\int_0^{\beta^*} \mathrm{d}\beta_1^*\mathrm{e}^{-\beta_1^*}\int_0^1 \mathrm{d}r\, r^2 y^{\mathrm{PS}}_{n-2}(r|\beta_1^*), \quad n \geq 2. \tag{23}$$

The exact function $y_2^{\mathrm{PS}}(r|\beta^*)$ for the PS model, as well as the corresponding expressions in the Percus–Yevick (PY) and HNC approximations, have recently been obtained [19]. In particular, the PY result is

$$\begin{aligned} y_2^{\mathrm{PS-PY}}(r|\beta^*) = \frac{(1-\mathrm{e}^{-\beta^*})^3}{35r}[&(r-1)^4 \\ &\times (r^3+4r^2-53r-162)(4\mathrm{e}^{-\beta^*}-1) \\ &\times \Theta(1-r)+2(r-2)^2 \\ &\times (r^5+4r^4-51r^3-10r^2+479r-81) \\ &\times (1-\mathrm{e}^{-\beta^*})\Theta(r-2)-(r-3)^4 \\ &\times (r^3+12r^2+27r-6)\Theta(3-r)], \end{aligned} \tag{24}$$

where $\Theta(x)$ is the Heaviside step function. Inserting equation (24) into equations (22) and (23), one obtains

$$b_4^{\mathrm{PS-PY,v}}(\beta^*) = \frac{16}{35}(1-\mathrm{e}^{-\beta^*})^4(35-171\mathrm{e}^{-\beta^*}), \tag{25}$$

$$b_4^{\mathrm{PS-PY,e}}(\beta^*) = \frac{2}{175}(1-\mathrm{e}^{-\beta^*})^4(907-6347\mathrm{e}^{-\beta^*}), \tag{26}$$

respectively. As expected, the virial and energy routes to the fourth virial coefficient of the PS fluid differ in the PY approximation. This difference persists in the HS zero-temperature limit $\beta^* \to \infty$ (path B′), namely

$$b_4^{\mathrm{HS-PY,v}} = 16, \quad b_4^{\mathrm{HS-PY,e}} = \frac{1814}{175} \simeq 10.37. \tag{27}$$

However, $b_4^{\mathrm{HNC-PY,v}}(\beta^*) = b_4^{\mathrm{HNC-PY,e}}(\beta^*)$ [19], in agreement with a general property of the HNC approximation [12]. Figure 3 shows the temperature dependence of the exact fourth virial coefficient of the PS fluid, as well as the results obtained from the PY and HNC approximations via the virial, compressibility and energy routes [19].

3.3. *Path A*

Equations (19) and (21) show that the virial and energy routes are always equivalent when the HS limit is taken through the double path A + A′. On the other hand, equation (27) shows that this equivalence is generally broken when the chosen path is B + B′. While in the path A + A′ one ends with $\lambda = 1$, in the path B + B′ the first step is $\lambda \to 0$. Therefore, it might reasonably be expected that if one goes directly from SS to HS through path A (see figure 2), the resulting energy-route EoS for HS *artificially* depends on λ. To illustrate this, let us

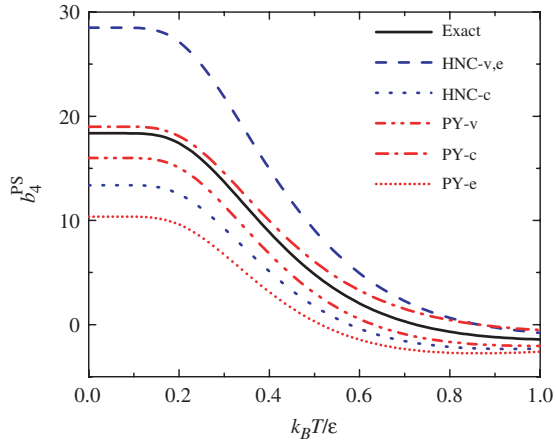

Figure 3. Temperature dependence of the fourth virial coefficient for the PS fluid. The curves correspond to the exact result (————), the virial and energy routes in the HNC approximation (– – –), the compressibility route in the HNC approximation (- - - -), the virial route in the PY approximation (– · · –), the compressibility route in the PY approximation (– · – · –) and the energy route in the PY approximation (· · · · · ·).

consider the following toy approximation for the function $y_2^{\mathrm{SS}}(r|\beta^*;\lambda)$:

$$\begin{aligned} y_2^{\mathrm{SS-toy}}(r|\beta^*;\lambda) = y_2^{\mathrm{PS-PY}}(r|\beta^*) + y_2^{\mathrm{HS-PY}}(r/\lambda)\lambda^6 \\ - \frac{y_2^{\mathrm{PS-PY}}(r|\beta^*)y_2^{\mathrm{HS-PY}}(r/\lambda)\lambda^6}{y_2^{\mathrm{HS-PY}}(r)}, \end{aligned} \tag{28}$$

where $y_2^{\mathrm{PS-PY}}(r|\beta^*)$ is given by equation (24) and $y_2^{\mathrm{HS-PY}}(r) = \lim_{\beta^*\to\infty} y_2^{\mathrm{PS-PY}}(r|\beta^*)$. The toy approximation (28) reduces to the PY result in the four limits indicated in figure 1, namely

$$\lim_{\beta^*\to 0} y_2^{\mathrm{SS-toy}}(r|\beta^*;\lambda) = y_2^{\mathrm{HS-PY}}(r/\lambda)\lambda^6, \tag{29}$$

$$\begin{aligned} \lim_{\beta^*\to\infty} y_2^{\mathrm{SS-toy}}(r|\beta^*;\lambda) &= \lim_{\lambda\to 1} y_2^{\mathrm{SS-toy}}(r|\beta^*;\lambda) \\ &= y_2^{\mathrm{HS-PY}}(r), \end{aligned} \tag{30}$$

$$\lim_{\lambda\to 0} y_2^{\mathrm{SS-toy}}(r|\beta^*;\lambda) = y_2^{\mathrm{PS-PY}}(r|\beta^*). \tag{31}$$

From that point of view, $y_2^{\mathrm{SS-toy}}(r|\beta^*;\lambda)$ can be seen as a simplified version of the true $y_2^{\mathrm{SS-PY}}(r|\beta^*;\lambda)$ provided by the PY approximation. In any case, the point here is not how accurate or how close to the PY function the toy approximation (28) is, but to illustrate the sensitivity of the energy route to the fixed value of λ.

According to equation (20), the energy-route fourth virial coefficient when path A is followed becomes

$$b_4^{\mathrm{HS-toy,e}} = \frac{36}{1-\lambda^9}\int_\lambda^1 \mathrm{d}r\, r^2 \int_0^\infty \mathrm{d}\beta^* \mathrm{e}^{-\beta^*} y_2^{\mathrm{SS-toy}}(r|\beta^*;\lambda). \tag{32}$$

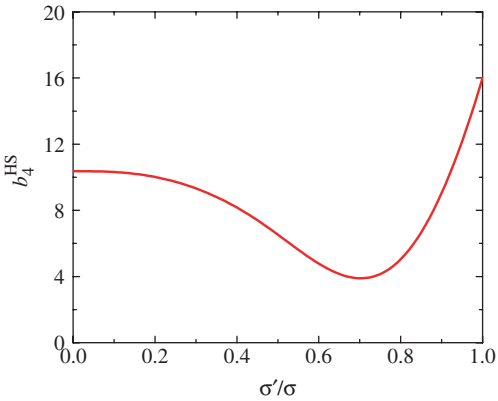

Figure 4. Plot of the HS fourth virial coefficient as a function of $\lambda \equiv \sigma'/\sigma$. This coefficient is obtained by starting from the energy-route coefficient for the SS fluid in approximation (28) and then taking the zero-temperature limit (path A).

The integration over β^* is straightforward, while in the integration over r one needs to distinguish the cases $0 \le \lambda \le 1/3$, $1/3 \le \lambda \le 1/2$ and $1/2 \le \lambda \le 1$. The artificial dependence of $b_4^{\mathrm{HS-toy,e}}$ on λ is shown in figure 4. The extreme points of the curve agree with the results obtained previously, i.e. $b_4^{\mathrm{HS-PY,e}} = b_4^{\mathrm{HS-PY,v}} = 16$ along the path $\mathrm{A}+\mathrm{A}'$, but $b_4^{\mathrm{HS-PY,e}} = 1814/175 \neq b_4^{\mathrm{HS-PY,v}}$ along the path $\mathrm{B}+\mathrm{B}'$. It cannot be ascertained at this point whether the non-monotonic behaviour in figure 4 is an artifact of the toy approximation (28) or a feature also shared by the PY approximation. In any case, the important issue here is that the equivalence between the energy and virial routes is only reached, in general, if $\lambda \to 1$.

3.4. *Path C*

As figure 2 illustrates, the HS fluid can also be reached from the PS fluid by keeping the temperature constant but shrinking the shoulder (path C). However, this does not provide any information concerning the energy-route EoS of the HS system. Taking the limit $\lambda \to 1$ on both sides of equation (10), one simply obtains $Z_{\mathrm{HS}}^{\mathrm{e}}(\eta) = Z_{\mathrm{HS}}^{\mathrm{e}}(\eta)$. In any case, an interesting equation is obtained by first differentiating with respect to λ and then taking the limit $\lambda \to 1$. The result is

$$\left.\frac{\partial Z_{\mathrm{SS}}^{\mathrm{e}}(\eta,\beta^*;\lambda)}{\partial\lambda}\right|_{\lambda=1} = 3\eta\frac{\partial}{\partial\eta}\left[Z_{\mathrm{HS}}^{\mathrm{e}}(\eta) - (1-\mathrm{e}^{-\beta^*})Z_{\mathrm{HS}}^{\mathrm{v}}(\eta)\right]. \tag{33}$$

4. Summary and discussion

The aim of this paper has been to investigate the possibility of circumventing the ill-defined energy route to thermodynamics for HS fluids by first considering SS fluids and then taking adequate limits. The SS interaction potential is particularly appropriate because it is simple and yet reduces to the HS model in several independent limits (see figure 1). The high-temperature limit ($T^* \to \infty$ or, equivalently, $\epsilon \to 0$) is important since it provides the necessary boundary condition to obtain the compressibility factor by integrating the internal energy over temperature (see equations (5), (10) and (14)).

Imagine that an *approximate* cavity function $y_{\mathrm{SS}}(r|\eta,\beta^*;\lambda)$ for the SS liquid is known (either analytically or numerically). Then, equations (10) and/or (14) can be used to assign a meaning to the energy-route compressibility factor for HS, $Z_{\mathrm{HS}}^{\mathrm{e}}(\eta)$, or to the associated virial coefficients, $b_n^{\mathrm{HS,e}}$. In order to do so, the limit of vanishing shoulder width at finite temperature (path C in figure 2) is useless. On the other hand, well-defined results are obtained by taking the zero-temperature limit $\beta^* \to \infty$ (path A), as shown by equations (15) and (20). Although the above limit is taken at fixed width λ, the final result should, on physical grounds, be independent of λ. However, the approximate nature of $y_{\mathrm{SS}}(r|\eta,\beta^*;\lambda)$ gives rise, in general, to an inconsistent dependence of $Z_{\mathrm{HS}}^{\mathrm{e}}(\eta)$ on λ, as illustrated by figure 4 in the case of the toy approximation (28).

The artificial dependence of $Z_{\mathrm{HS}}^{\mathrm{e}}(\eta)$ on λ suggests further taking the limit $\lambda \to 1$ as the most 'sensible' path to go from SS to HS (path $\mathrm{A}+\mathrm{A}'$). In this way, the HS fluid is reached twice, first by decreasing the temperature (or, equivalently, increasing the shoulder height, $\epsilon \to \infty$) and then by shrinking the shoulder width. As proven here and in [14], the resulting EoS coincides exactly with that obtained directly from the virial route, i.e. $Z_{\mathrm{HS}}^{\mathrm{e}}(\eta) = Z_{\mathrm{HS}}^{\mathrm{v}}(\eta)$, no matter which approximate theory is used.

As stated above, the anomalous λ dependence of $Z_{\mathrm{HS}}^{\mathrm{e}}(\eta)$ when path A is followed has been illustrated by considering a simple toy approximation, equation (28), and thus it might be conjectured that such a dependence would disappear when a more 'respected' theory is taken into account. However, this is not the case, at least for the PY theory. When the zero-temperature limit $\beta^* \to \infty$ is taken at $\lambda = 0$ (i.e. from the PS model, path $\mathrm{B}+\mathrm{B}'$), the resulting value of the fourth virial coefficient ($b_4^{\mathrm{HS-PY,e}} \simeq 10.37$) strongly differs from the value obtained in the opposite limit $\lambda \to 1$ ($b_4^{\mathrm{HS-PY,e}} = b_4^{\mathrm{HS-PY,v}} = 16$).

Of course, all the routes to thermodynamics self-consistently agree if the *exact* function $y_{SS}(r|\eta, \beta^*; \lambda)$ is considered. Moreover, the HNC theory is known to yield consistent thermodynamic properties via the energy and virial routes for any interaction potential [12]. This is explicitly verified in the case of the fourth virial coefficient for PS fluids [19], as shown in figure 3. Therefore, a plot (similar to that of figure 4) of the fourth virial coefficient obtained from path A would show the constant value $b_4^{\mathrm{HS-HNC,e}} = b_4^{\mathrm{HS-HNC,v}} = 28.5$. The interesting question is, what is the necessary and sufficient condition to obtain thermodynamic properties independent of λ when going from SS to HS through path A? To address this question, define the quantity

$$\Phi_{SS}(\eta; \lambda) \equiv 12\eta \int_0^\infty \mathrm{d}\beta^* \mathrm{e}^{-\beta^*} \int_\lambda^1 \mathrm{d}r\, r^2 y_{SS}(r|\eta, \beta^*; \lambda). \quad (34)$$

Then, either from equation (15) or from equation (9) using the thermodynamic relation $u = \partial(\beta f)/\partial\beta$, where f is the free energy per particle, one obtains

$$\Phi_{SS}(\eta; \lambda) = \varphi^{\mathrm{e}}_{\mathrm{HS}}(\eta) - \varphi^{\mathrm{e}}_{\mathrm{HS}}(\eta\lambda^3), \quad (35)$$

where $\varphi \equiv \beta f_{\mathrm{ex}}$, f_{ex} being the excess free energy per particle. Therefore, the sought necessary and sufficient condition is that the quantity $\Phi_{SS}(\eta; \lambda)$ must be equal to a function that only depends on η plus a function that only depends on $\eta' \equiv \eta\lambda^3$. The fact that both functions are actually the same, except for a sign, is a consequence of the trivial property $\Phi_{SS}(\eta; 1) = 0$. In differential form, condition (35) becomes

$$\frac{\partial}{\partial\lambda}\lambda\frac{\partial}{\partial\lambda}\Phi_{SS}(\eta; \lambda) = 3\eta\frac{\partial}{\partial\eta}\frac{\partial}{\partial\lambda}\Phi_{SS}(\eta; \lambda). \quad (36)$$

If this condition is fulfilled, then equation (35) implies that $\varphi^{\mathrm{e}}_{\mathrm{HS}}(\eta) = \Phi_{SS}(\eta; 0)$. The independence of $\varphi^{\mathrm{e}}_{\mathrm{HS}}(\eta)$ from λ implies that the energy and virial routes become equivalent, as discussed above. This can easily be checked from equation (35) by differentiating both sides with respect to λ and then setting $\lambda = 1$. Taking into account the thermodynamic relation $Z = \rho\,\partial(\beta f)/\partial\rho$, one then obtains $Z^{\mathrm{e}}_{\mathrm{HS}}(\eta) - 1 = Z^{\mathrm{v}}_{\mathrm{HS}}(\eta) - 1 = 4\eta y_{\mathrm{HS}}(1|\eta)$.

5. Conclusion

The question posed in the title of the paper is only meaningful if the energy route is understood by starting from an interaction potential $\phi(r)$ which encompasses the HS model in certain limits. Since, according to equation (5), obtaining the compressibility factor from the internal energy requires an integration over temperature, it is necessary that the potential $\phi(r)$ becomes equivalent to that of HS (or negligible) in the limit $T \to \infty$. Next, in order to obtain a non-trivial result, $\phi(r)$ must also become indistinguishable from HS in an independent limit, for instance $T \to 0$. The results presented in this paper by taking $\phi(r) = \phi_{SS}(r)$ suggest that, in general, either the energy-route EoS for HS fluids is identical to the virial-route EoS or the former is not unique, but depends on the path followed to reach the HS fluid.

A final comment is in order. When considering the energy route in the case of SW fluids, it is usual to fix the boundary condition at $T \to \infty$ by freely choosing a convenient form for $Z_{\mathrm{HS}}(\eta)$, such as the Carnahan–Starling EoS [3]. However, this must be done with caution since the resulting EoS would become inconsistent when making the change $\epsilon \leftrightarrow -\epsilon$, in which case $\phi_{SW}(r) \leftrightarrow \phi_{SS}(r)$. From that point of view, it would be more consistent to take the virial form $Z^{\mathrm{v}}_{\mathrm{HS}}(\eta)$ corresponding to the approximation (PY, HNC, MSA, etc.) being used to describe the SW fluid.

Acknowledgements

This work was supported by the Ministerio de Educación y Ciencia (Spain) through grant No. FIS2004-01399 (partially financed by FEDER funds) and by the European Community's Human Potential Programme under contract HPRN-CT-2002-00307, DYGLAGEMEM.

References

[1] R. Balescu, *Equilibrium and Nonequilibrium Statistical Mechanics* (Wiley, New York, 1974).
[2] J. A. Barker and D. Henderson, Rev. Mod. Phys. **48,** 587 (1976).
[3] J.-P. Hansen and I. R. McDonald, *Theory of Simple Liquids* (Academic Press, London, 1986).
[4] Y. Rosenfeld and N. W. Ashcroft, Phys. Rev. A **20,** 1208 (1979).
[5] F. J. Rogers and D. A. Young, Phys. Rev. A **30,** 999 (1984).
[6] G. Zerah and J-P. Hansen, J. Chem. Phys. **84,** 2336 (1985).
[7] J. S. Høye and G. Stell, J. Chem. Phys. **67,** 439 (1977); D. Pini, G. Stell, and N. B. Wilding, Molec. Phys. **95,** 483 (1998); C. Caccamo, G. Pellicane, D. Costa, D. Pini, and G. Stell, Phys. Rev. E **60,** 5533 (1999).
[8] A. Parola and L. Reatto, Adv. Phys. **44,** 211 (1995).
[9] L. L. Lee, J. Chem. Phys. **103,** 9388 (1995); **107,** 7360 (1997).

[10] E. Waisman, Molec. Phys. **25,** 45 (1973); L. Blum, J. Statist. Phys. **22,** 661 (1980).
[11] S. B. Yuste and A. Santos, Phys. Rev. A **43,** 5418 (1991); S. B. Yuste, A. Santos, and M. López de Haro, J. Chem. Phys. **108,** 3683 (1998).
[12] T. Morita, Prog. Theor. Phys. **23,** 829 (1960); see also [2], p. 636.
[13] B. M. Mladek, M.-J. Fernaud, G. Kahl, and M. Neuman, Condens. Matter **8,** 135 (2005); B. M. Mladek, G. Kahl, and M. Neuman, J. Chem. Phys. **124,** 064503 (2006).
[14] A. Santos, J. Chem. Phys. **123,** 104102 (2005).
[15] D. M. Heyes and P. J. Aston, J. Chem. Phys. **97,** 5738 (1992); C. Rascón, E. Velasco, L. Mederos, and G. Navascués, *ibid.* **106,** 6689 (1997); A. R. Denton and H. Löwen, J. Phys.: Condens. Matter **9,** L1 (1997); P. Bolhuis and D. Frenkel, *ibid.* **9,** 381 (1997); A. Lang, G. Kahl, C. N. Likos, H. Löwen, and M. Watzlawek, *ibid.* **11,** 10143 (1999); A. L. Benavides and A. Gil-Villegas, Molec. Phys. **97,** 1225 (1999); A. Vidales, A. L. Benavides, and A. Gil-Villegas, *ibid.* **99,** 703 (2001); A. J. Schultz, C. K. Hall, and J. Genzer, J. Chem. Phys. **117,** 10329 (2002); G. Malescio and G. Pellicane, Nature Mater. **2,** 97 (2003).
[16] C. Marquest and T. A. Witten, J. Phys. (France) **50,** 1267 (1989); W. Klein, H. Gould, R. A. Ramos, I. Clejan, and A. I. Mel'cuk, Physica A **205,** 738 (1994); C. N. Likos, M. Watzlawek, and H. Löwen, Phys. Rev. E **58,** 3135 (1998); M. Schmidt, J. Phys.: Condens. Matter **11,** 10163 (1999); M. J. Fernaud, E. Lomba, and L. L. Lee, J. Chem. Phys. **112,** 810 (2000); Y. Rosenfeld, M. Schmidt, M. Watzlawek, and H. Löwen, Phys. Rev. E **62,** 5006 (2000); C. N. Likos, A. Lang, M. Watzlawek, and H. Löwen, *ibid.* **63,** 031206 (2001); M. Schmidt and M. Fuchs, J. Chem. Phys. **117,** 6308 (2002); S.-C. Kim and S.-Y. Suh, *ibid.* **117,** 9880 (2002); N. Choudhury and S. K. Ghosh, *ibid.* **119,** 4827 (2003); L. Acedo and A. Santos, Phys. Lett. A **323,** 427 (2004); Al. Malijevsk and A. Santos, J. Chem. Phys. **124,** 074508 (2006).
[17] C. N. Likos, Phys. Rep. **348,** 267 (2001).
[18] Note that, in general, η does not represent a packing fraction. The true packing fraction is $\eta' = (\pi/6)\rho\sigma'^3 = \eta\lambda^3$. However, since λ will be considered as a varying parameter, it is convenient to characterize the density with η rather than with η'.
[19] A. Santos and Al. Malijevský, preprint arxiv: Cond-mat/0609549.